RAP Series High Precision Sensor Encoder

Catalogue

1. Product Introduction..... 1
1.1 Product Features..... 1
1.2 Principle Introduction..... 1
1.3 Product Model Overview..... 2
2. mechanical dimension..... 3
2.1 Dimensional drawings of various rotor models..... 3
2.2 Dimensional drawings of stator for various models..... 5
3. performance parameter..... 7
4. assembly instruction..... 8
4.1 rotor eccentricity adjustment..... 8
4.2 adjustment of the gap between the stator and the rotor..... 12
5. Cable Sequence and Communication Protocol..... 13
5.1 cable sequence..... 13
5.2 BISS-C (One-way) interface protocol..... 14
5.3 SSI interface protocol..... 15
5.4 UART serial port (RS422) protocol..... 16
6. Order Information..... 17
6.1 Single communication interface version..... 17
6.2 Dual communication interface version..... 18

Version: 20230222

1. Product Introduction

1.1 Product Features

Electromagnetic Induction Principle

Non-optical Encoder - Pollution Resistant

High Precision & High Rotation Speed

High Reliability - Absolute Value Output

Split-type Design - Easy Installation

IP67 Protection Rating + Large Aperture

Hollow Shaft

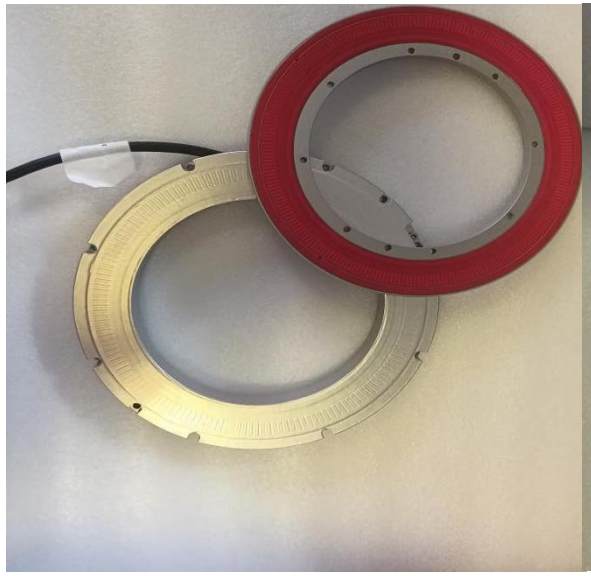

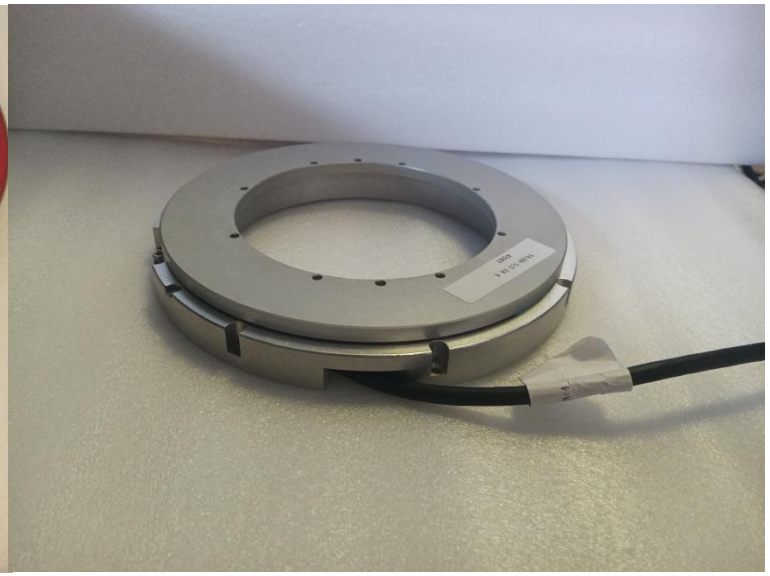

1.2 Principle Introduction

The R A P series sensor encoder is based on the principle of electromagnetic induction detection, and consists of a stator and a rotor. Compared with the photoelectric encoder, it has higher anti-pollution and anti-impact ability.

The structure can be understood as a "planar rotary transformer", the induction conductor is distributed on the surface of the stator and rotor in the form of planar winding.

It has absolute value detection channel, and can calculate the absolute position of encoder when it is turned on.

It has strong environmental adaptability and can work normally in water.

The wiring is flexible and can be from the side or bottom of the stator.

1.3 Product Model Overview

There are 6 mass-produced models, and the corresponding maximum outer diameter (stator outer diameter) and minimum inner diameter (rotor inner diameter) are shown in the table below. The detailed dimensions are shown in the mechanical dimension diagram at the end.

The corresponding stator outer diameter and rotor inner diameter dimensions for each model						
Model	RAP-80	RAP-110	RAP-160	RAP-210	RAP-260	RAP-310
Stator outer diameter	80	110	160	210	260	310
Inner diameter of rotor	20	48.8	98.8	148.8	198.8	248.8

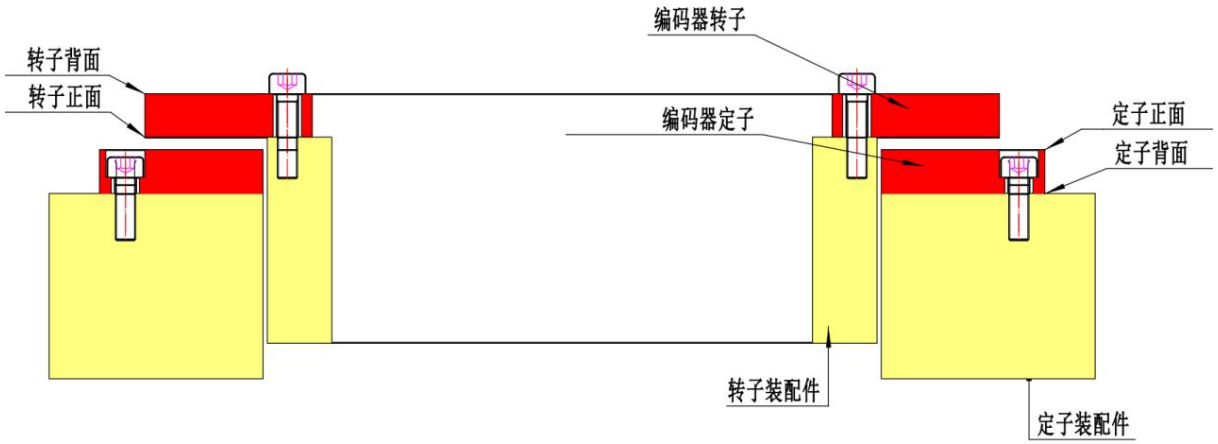

编码器应用示意图

2.机械尺寸

2.1 各型号转子尺寸图

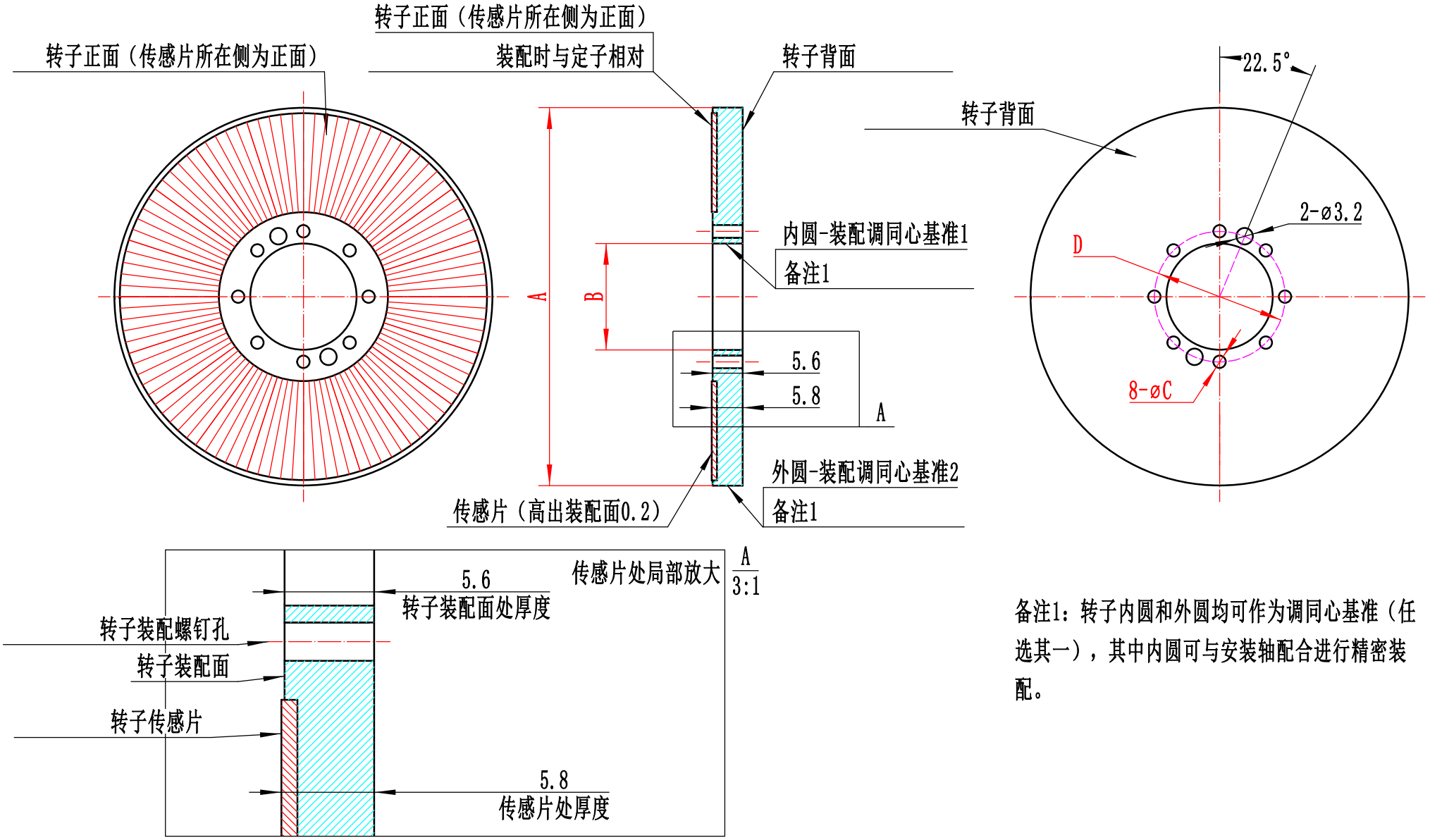

备注1：转子内圆和外圆均可作为调同心基准（任选其一），其中内圆可与安装轴配合进行精密装配。

Table of Rotor Dimensions for Various Models

The dimensions of the rotors for each model						
Model	RAP-80	RAP-110	RAP-160	RAP-210	RAP-260	RAP-310
A (rotor diameter)	71	101	151	201	251	301
B (inner diameter of rotor, H7 tolerance)	$20^{+0.021}_{0}$	$48.8^{+0.025}_{0}$	$98.8^{+0.035}_{0}$	$148.8^{+0.04}_{0}$	$198.8^{+0.046}_{0}$	$248.8^{+0.046}_{0}$
C (screw hole diameter)	2. 4	2. 9	2. 9	2. 9	2. 9	2. 9
D (diameter of the circle where the screw hole is located)	24. 5	53. 8	103. 8	153. 8	203. 8	253. 8

2.2 各型号定子尺寸图

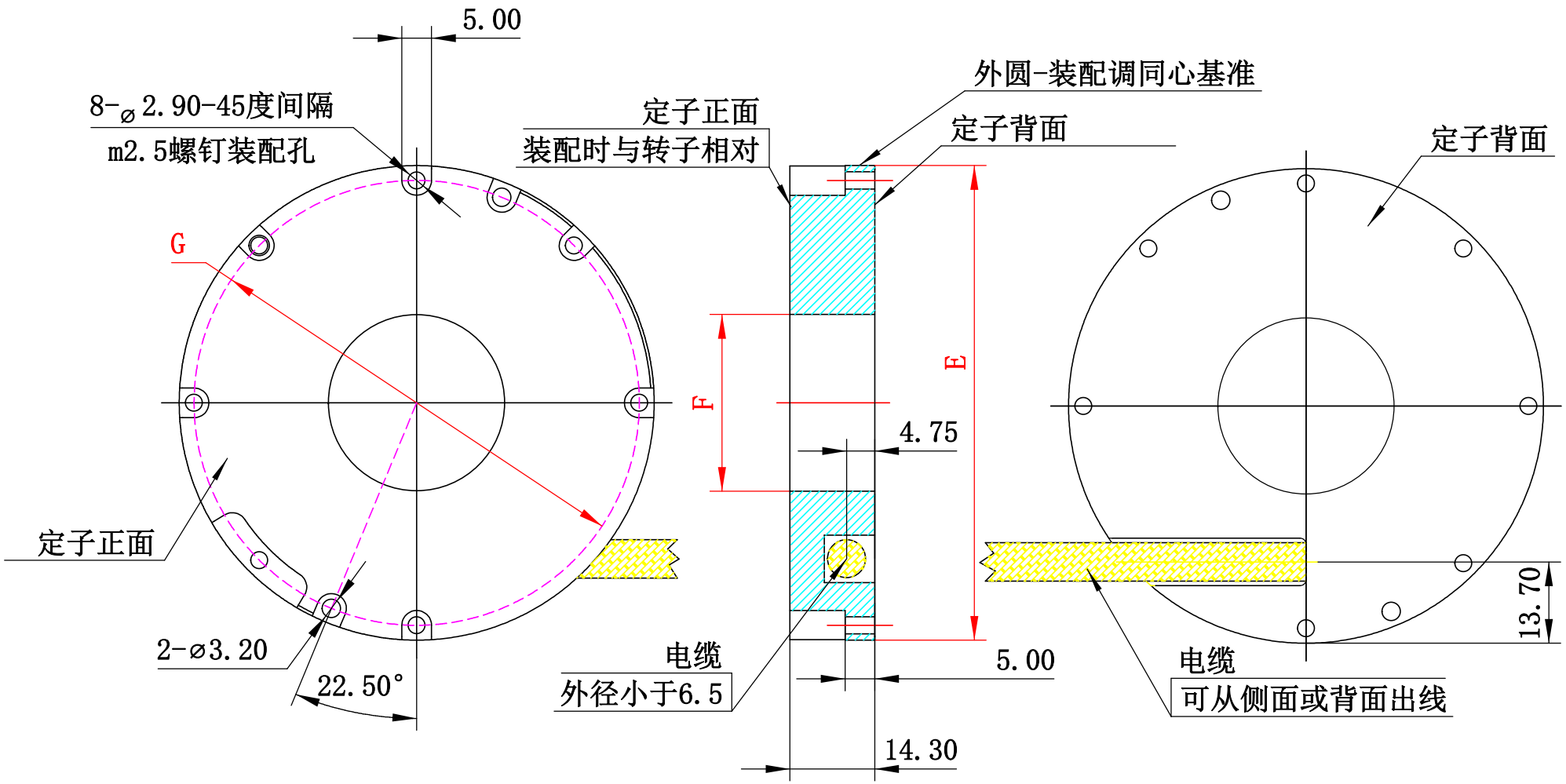
5.00
8-⌀2.90-45度间隔
m2.5螺钉装配孔
G
定子正面
2-⌀3.20
22.50°
定子正面
装配时与转子相对
外圆-装配调同心基准
定子背面
F
E
4.75
电缆
外径小于6.5
5.00
14.30
定子背面
13.70
电缆
可从侧面或背面出线

Table of Stator Dimensions for Various Models

Dimensions of stator for various models						
Model	RAP-80	RAP-110	RAP-160	RAP-210	RAP-260	RAP-310
E (stator outer diameter, h7 tolerance)	$80^{0}_{-0.03}$	$110^{0}_{-0.035}$	$160^{0}_{-0.04}$	$210^{0}_{-0.046}$	$260^{0}_{-0.052}$	$310^{0}_{-0.052}$
F (inner diameter of the stator)	29.8	59.8	109.8	159.8	209.8	259.8
G (diameter of the circle where the screw hole is located)	75	105	155	205	255	305

3. Performance Parameter

Performance parameter							
Model	RAP-80	RAP-110	RAP-160	RAP-210	RAP-260	RAP-310	Unit
Absolute value	Yes						
Resolution ratio	10 Up to 23						Bit
Repositioning accuracy	+-1						LSB
Positioning accuracy	+-30	+10 to 20	+10 to 20	+2 to 10	+2 to 10	+2 to 10	Arc-second
Internal location update cycle	<0.01						ms
Maximum speed	30000	20000	15000	10000	8500	7500	r/min
Communication interface protocol	SSI/BISS-C UART serial port (supports independent dual interfaces, all three interfaces based on RS422 hardware standard)						
Service voltage	5-12 or 12-30						V
Consumption current	<0.25						A
Reverse power supply protection	The maximum reverse protection voltage of the power supply is the nominal maximum supply voltage.						
Working temperature	-40 to 80						Degree Celsius
Levels of protection	IP67						
Available machine time	1.2 The communication interface data becomes valid after the encoder is powered on for 1.2 seconds. Note: Ensure the encoder remains stationary without rotation during this period.						S
Lash	IEC 60068-2-27 100g for 11ms-axial and radial						
Shake	IEC 60068-2-6 20g for 10-2000Hz-Axial and Radial						
EMC (Electromagnetic Compatibility)	Complies with IEC 61000-6-2 standard-Suitable for harsh EMC environments						

EMC electromagnetic radiation	Complies with IEC 61000-6-4, suitable for use near electromagnetic interference-sensitive equipment	

4. Assembly Instruction

When assembling encoders, note the following points

1. The eccentricity of the outer circle of the stator and the inner circle (or outer circle) of the rotor relative to the center of rotation. It is ensured by the flange or the dial.

2. The verticality of stator and rotor assembly surface relative to the rotation center is guaranteed by the precision of the mechanical parts themselves.

3. The clearance between the stator and rotor is ensured by the precision of the mechanical components. If the clearance exceeds the specified range, it can be adjusted using the gasket (included with the product).

4.1 Rotor Eccentricity Adjustment

When assembling stator and rotor, the outer circle of stator and inner circle (or outer circle) of rotor should be kept high concentricity with the rotating center.

This manual introduces two kinds of assembly methods of adjusting the concentricity of the stator and rotor, which are "stator and rotor adjusting concentricity locating method" and "stator and rotor adjusting concentricity dialing locating method".

If conditions permit, it is recommended to use the 'fixed-rotor and rotating-rotor coaxial alignment method'. This method ensures high assembly accuracy, thereby improving the encoder's detection precision. However, it requires manual alignment of the fixed and rotating rotors during assembly.

If the space is limited and it is inconvenient to make the dial during assembly, the "fixed and rotating rotor concentric stop mouth positioning method" is adopted.

The two methods can be mixed, for example, the rotor is positioned by the flange and the stator is assembled by the dial.

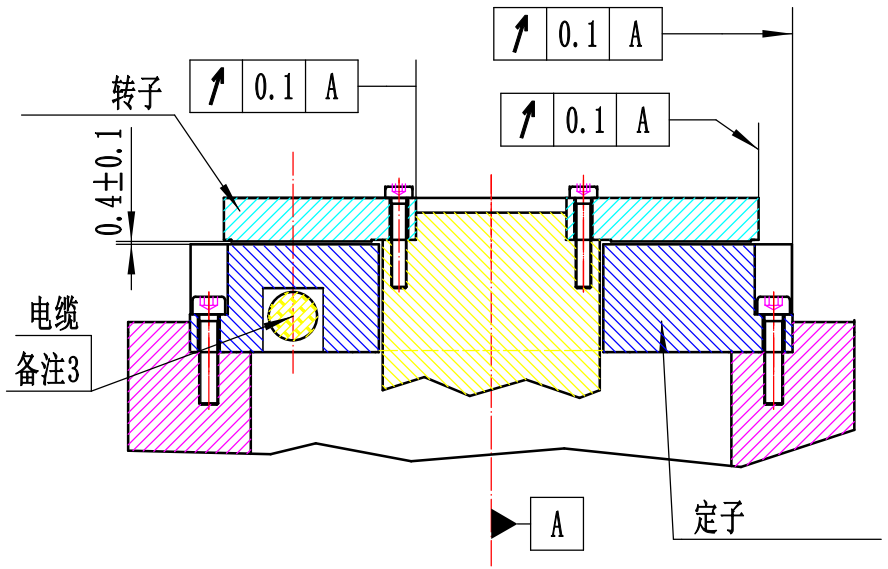

定、转子安装示意图（止口定位）

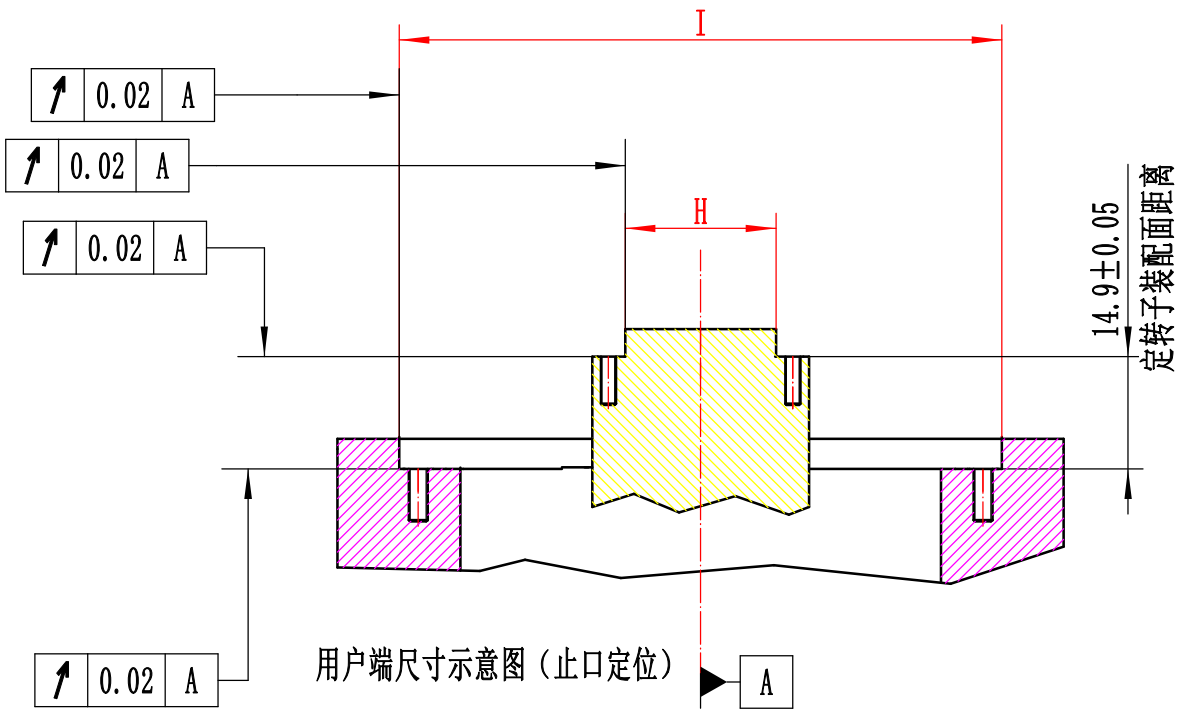

用户端尺寸示意图（止口定位）

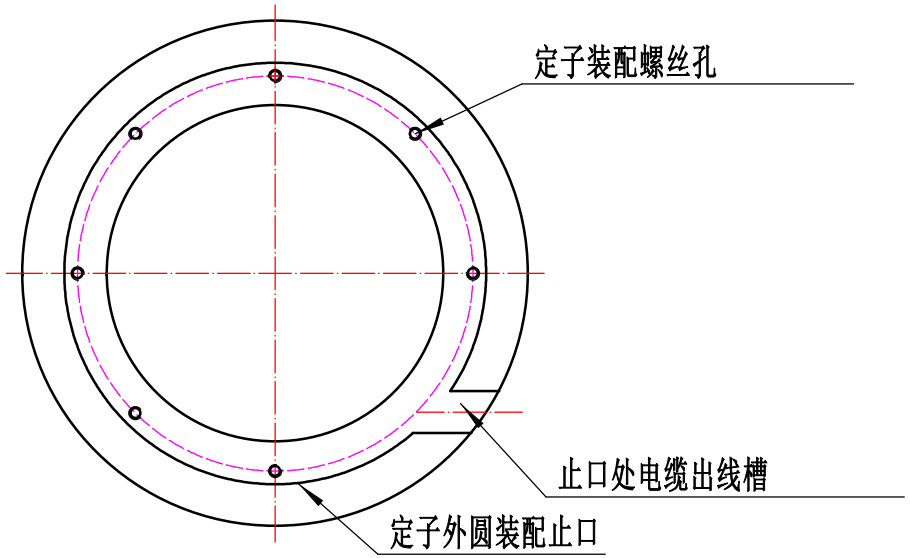

定子侧面出线时，定子安装面止口处出线槽示意图

备注1：如上图，转子的内圆或外圆，保证其中之一相对于旋转中心的跳动为0.1即可。

备注2：本说明中，定子和转子相对于旋转中心的同心度是依靠止口进行定位。为了提高装配精度，进而提高编码器精度，也可以直接对转子内圆（或外圆）和定子外圆进行打表装配，使其跳动更小，精度更高。

备注3：如上述安装示意图所示，电缆可以在定子底部引出。若电缆在侧面引出，则在止口处需要预留出线槽，以免电缆无法引出。

定、转子调同心止口定位方式

Dimensional Table of User End for Various Models (Fitting Positioning)

Model	RAP-80	RAP-110	RAP-160	RAP-210	RAP-260	RAP-310
H (turner locating stop diameter, g7 tolerance)	$20^{-0.007}_{-0.028}$	$48.8^{-0.009}_{-0.034}$	$98.8^{-0.012}_{-0.047}$	$148.8^{-0.014}_{-0.054}$	$198.8^{-0.015}_{-0.061}$	$248.8^{-0.015}_{-0.061}$
I (Stator locating flange diameter, G7 tolerance)	$80^{+0.04}_{+0.01}$	$110^{+0.047}_{+0.012}$	$160^{+0.054}_{+0.014}$	$210^{+0.061}_{+0.015}$	$260^{+0.069}_{+0.017}$	$310^{+0.069}_{+0.017}$

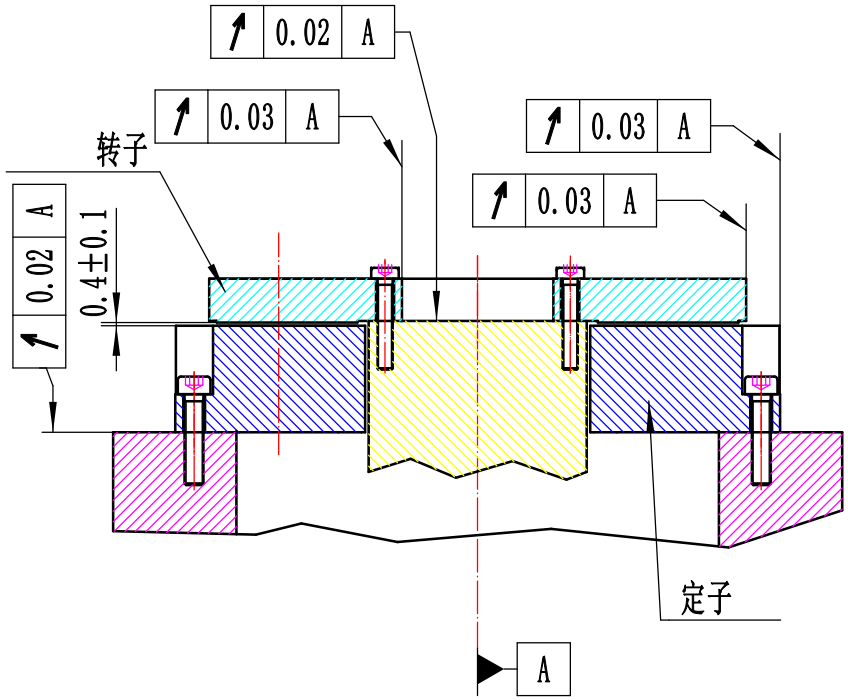

定、转子安装示意图（打表定位）

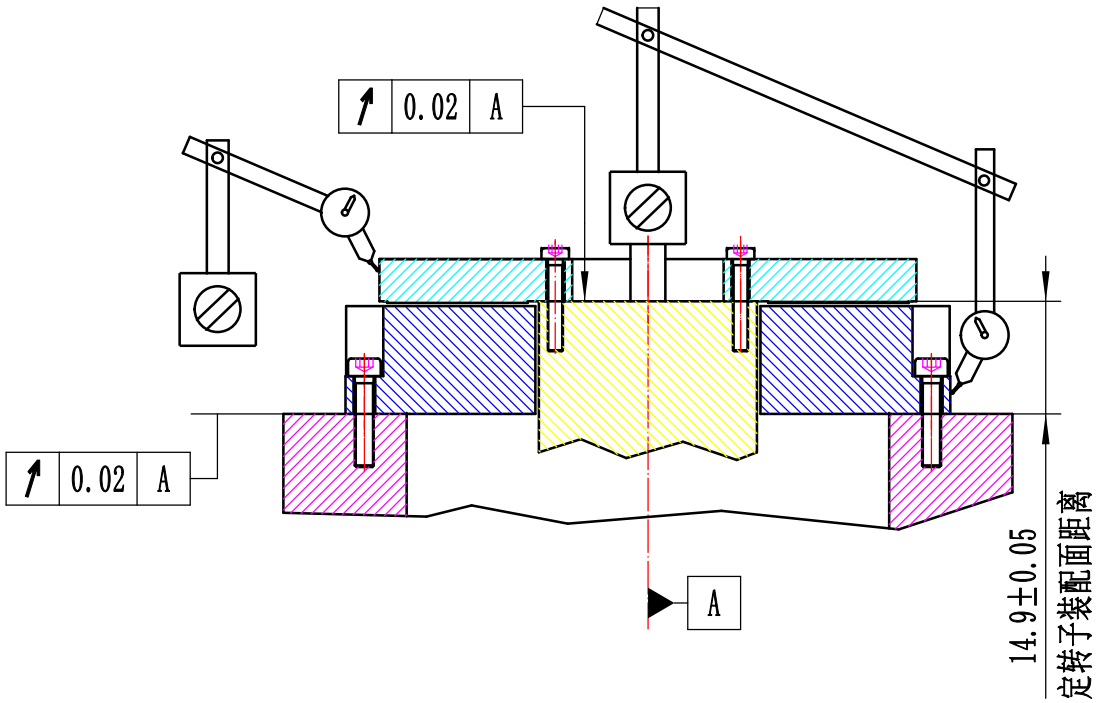

通过打表的方式，对定子和转子进行圆心定位。

备注1：如上图，转子的内圆或外圆，保证其中之一相对于旋转中心的跳动为0.03即可。

定、转子调同心打表定位方式（精度更高）

4.2定转子间隙调节

定、转子间隙要求在0.4+-0.1范围内，装配时用塑料塞尺（随产品附带）塞入定转子之间间隙内测量。

若实际装配时，间隙小于0.3，则在转子与装配面之间垫上不锈钢垫片（随产品附带0.2mm转子调整垫片），以此加大间隙。

若实际装配时，间隙大于0.5，则在定子与装配面之间垫上不锈钢垫片（随产品附带0.2mm定子调整垫片），以此减小间隙。

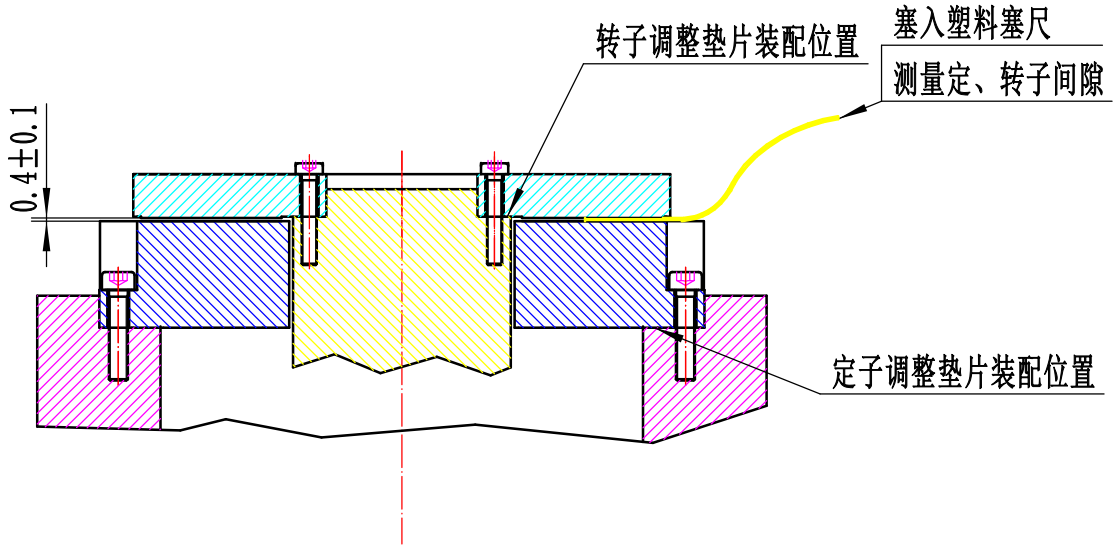

定、转子间隙调节

5. Cable Sequence and Communication Protocol

5.1 Cable Sequence

5.1.1 Cable Sequence (single Communication Interface Version)

The cable wire sequence for different interface communication protocols is shown in the table below.

Color codes and wire sequences for cables corresponding to different protocols									
Color of cable	Citrus sine-nsis	Black and white	Hispid arth-raxon	Reddish bl-ack	Red	White	Black	Lan	Shielding layer
BISS-C protocol	MA+	MA-	SLO+	SLO-	Vcc	Vcc	GND	GND	GND
SSI protocol	CLK+	CLK-	DATA+	DATA-	Vcc	Vcc	GND	GND	GND
UART gorge line	Empty	Empty	TXD+	TXD-	Vcc	Vcc	GND	GND	GND

5.1.2 Cable Sequence (dual Communication Interface Version)

5.2 BISS-C (One-Way) Interface Protocol

BISS-C (One-way) interface protocol	
Sequence chart	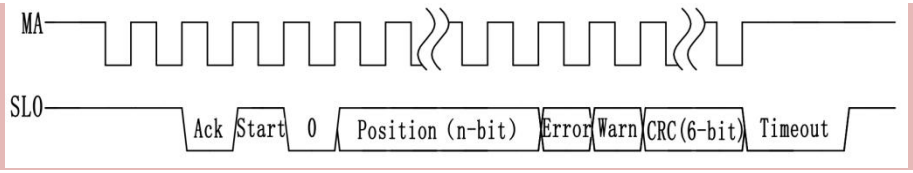
Hardware standards	RS422
Encoder bit count n	10 Up to 23 options
MA	Master clock
SLO	Substation (encoder end) output data
Clock frequency f_{MA}	0.25MHz-3MHz
Position data latch time	MA first rising edge
Ack/start/ “0”	Each is a fixed starting data with 1 bit
Position(n-bit)	n-bit absolute position data, binary code, MSB sent first
Error/Warn	Error/alarm bit, unused, outputs "1 1 "
CRC(6-bit)	The CRC-6 check code obtained by checking the Position (n-bit)/Error/Warn data, the polynomial is $x^6+x^1+x^0$(0x43). After inversion, the MSB is transmitted first.

5.3 SSI Interface Protocol

SSI interface protocol	
Sequence chart	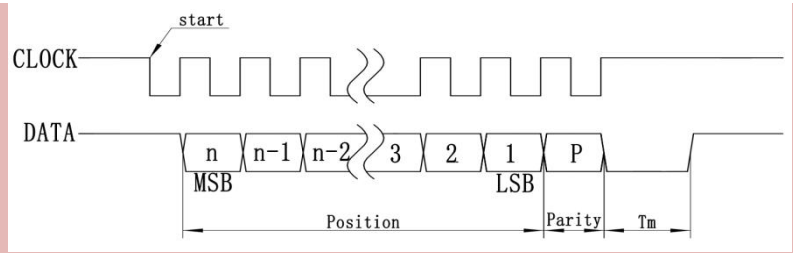
Hardware standards	RS422
Encoder bit count n	10 Up to 23 options
Clock frequency f_{CLOCK}	0.1MHz-1MHz
Tm	20us
P	Parity, even parity bit
Position	n-bit absolute position data, binary code, MSB sent first
start	Time when the position value data is locked
Data transfer interrupt condition	During the data transmission process, if the high-level duration of CLOCK exceeds 10us, the transmission state will be reset. Then the current position value will be latched at the next clock falling edge (corresponding to "start" in the timing diagram, and data transmission will restart), and the latched position value will start to be output at the next clock rising edge.

5.4 UART Serial Port (RS422) Protocol

UART serial port (RS422) interface protocol						
Data structure	The encoder transmits one data frame per position value, each frame consisting of 6 bytes, with the 8-bit data of each byte sent via the standard UART protocol.					
Hardware standards	RS422					
Encoder bit count n	10 Up to 22 characters					
Serial port baud rate	230400bps					
Encoder position value update frequency	3.33KHz encoder sends in a timed loop					
Output code	Natural binary					
The data format for each byte of the UART serial port	Start bit: 1 bit, data bits: 8 bits, stop bit: 1 bit, no parity bit 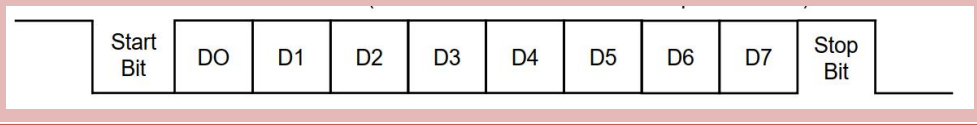					
Data frame format (6 bytes)	First byte (8 bits)	Second byte (8bits)	Third byte (8bits)	4th byte (8bits)	Fifth byte (8bits)	Sixth byte (8bits)
	“11000” +PD[21:19]	‘0’ +PD[18:12]	‘0’ +PD[11:5]	‘0’ +PD[4:0]+CRC[15:14]	‘0’ +CRC[13:7]	‘0’ +CRC[6:0]
Data frame description	1. PD[21:0] is the encoder position value. When the encoder resolution is less than 22 bits, the high bit of PD[21:0] is 0. For example, with a 19-bit encoder, PD[21:19] is "000" and PD[18:0] is the 19-bit encoder position value. 2. CRC[15:0] is the CRC-16 checksum calculated for all 48bits of data (where the position of CRC[15:0] is set to 0). The CRC-16 polynomial is $x^{16}+x^{15}+x^{2}+x^{0}$(0x8005), with an initial value of 0X0000.					

6. Order Information

6.1 Single Communication Interface Version

Order code	RAP-XXX	-XXX	-X	-XX
Meaning	Size and dimensions	Interface protocol	Service voltage	Line length (1 to 20 meters)
Option	RAP-80 (Stator OD 80mm) RAP-11 (Stator OD 110mm) RAP-16 (Stator OD 160mm) RAP-21 (Stator OD 210mm) RAP-26 (Stator OD 260mm) RAP-31 (Stator OD 310mm)	-B23 23-bit BISS-C protocol (resolution optional 10 to 23bits) -S23 23-bit SSI protocol (resolution optional 10 to 23 bits) -A22 22-bit UART serial port (RS422) protocol (resolution optional 10 to 22 bits)	-UA 5 to 12V -UB 12 to 30V	-1 1 meter cable -2 2-meter cable . . . . . . -19 19 meter cable -20 20 meter cable

instance	**RAP-210-B23-UA-5**, indicating a RAP series encoder with an outer diameter of 210mm, 23-bit resolution BISS-C protocol, power supply of 5 to 12V, and a cable of 5 meters in length.

6.2 Dual Communication Interface Version

Order code	RAP-XXX	-XXX	-XXX	-X	-XX
Meaning	Size and dimensions	Interface 1 protocol	Interface 2 protocol	Service voltage	Line length (1 to 20 meters)
Option	RAP-80 (OD 80mm) RAP-110 (OD 110mm) RAP-160 (OD 160mm) RAP-210 (OD 210mm) RAP-260 (OD 260mm) RAP-310 (OD 310mm)	-B23 23-bit BISS-C protocol (resolution optional 10 to 23 bits) -S23 23-bit SSI protocol (resolution optional 10 to 23 bits) -A22 22-bit UART serial port (RS422) protocol (resolution optional 10 to 22 bits)	Optional items: same as Interface 1 protocol	-UA 5 to 12V -UB 12 to 30V	-1 1 meter cable -2 2-meter cable . . . . . . -19 19 meter cable -20 20-meter cable
instance	RAP-210-B23-A22-UA-5, indicating the double interface version of the RAP series encoder with an outer diameter of 210 mm, interface 1 is the 23-bit resolution BISS-C protocol, interface 2 is the 22-bit resolution serial protocol, 5 to 12V power supply, and 5 meters of cable.				

RAP2 Series High Precision Sensor Encoder

Catalogue

1. Product Introduction..... 1
1.1 Product Features..... 1
1.2 Principle Introduction..... 1
2. Mechanical dimensions and assembly requirements..... 2
3. performance parameter..... 3
4. Cable Sequence and Communication Protocol..... 4
4.1 cable sequence..... 4
4.2 BISS-C (One-way) interface protocol..... 5
4.3 SSI interface protocol..... 6
4.4 UART serial port (RS422) protocol..... 7
5. Order Information..... 8
5.1 Single communication interface version..... 8
5.2 Dual communication interface version..... 9

Version: 20230222

1. Product Introduction

1.1 Product Features

electromagnetic induction principle

Non-optical Encoder-
Anti-pollution Aviation
Aluminum Code Disc
with High Precision and
Impact Resistance
high speed

High reliability absolute value

split type Easy to install

IP67 large aperture

Superior environmental adaptability
supports independent dual interface

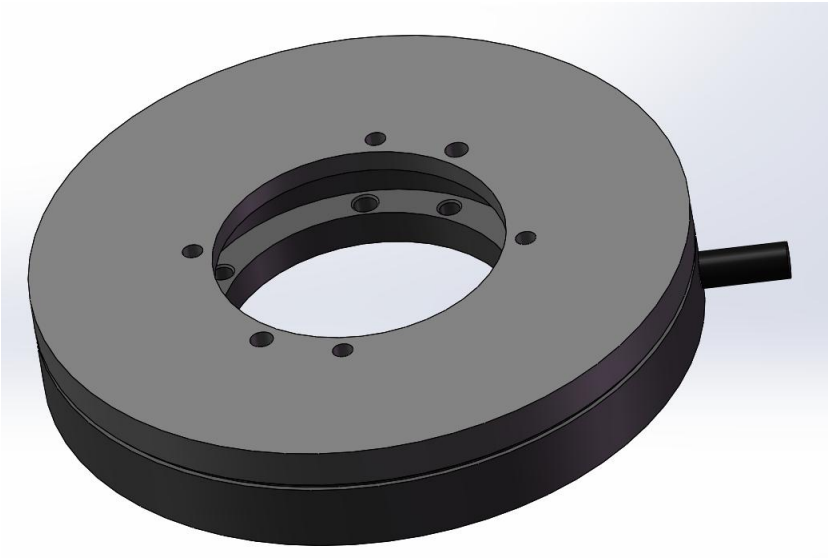

1.2 Principle Introduction

RAP2 series sensor encoder is based on the principle of electromagnetic induction detection, composed of stator and rotor. Compared with photoelectric encoder, it has higher anti-pollution and anti-impact ability.

The structure can be understood as a "planar rotary transformer", the induction conductor is distributed on the surface of the stator and rotor in the form of planar winding.

It has absolute value detection channel, and can calculate the absolute position of encoder when it is turned on.

It has strong environmental adaptability and can work normally in water.

2. 机械尺寸与装配要求

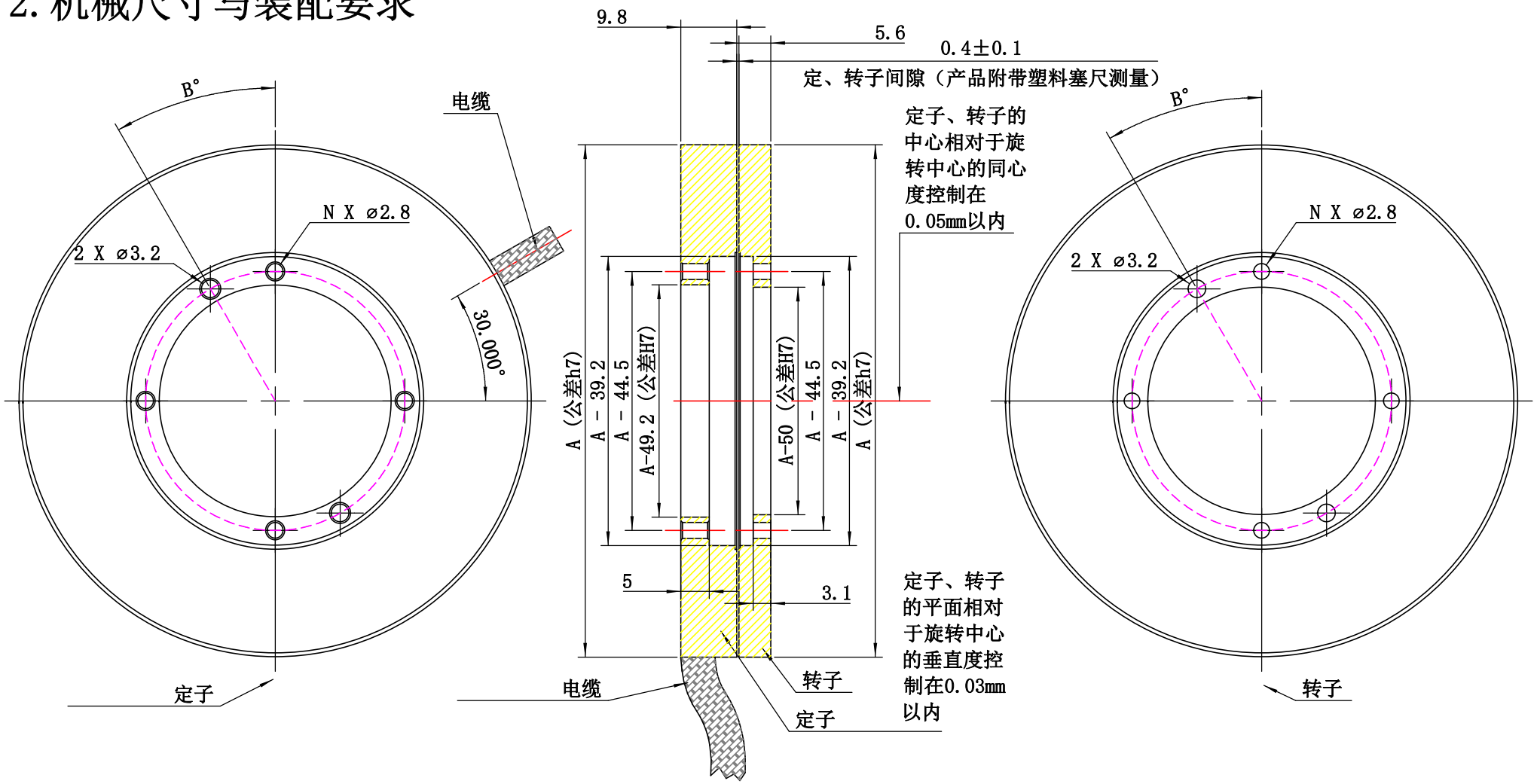

各型号尺寸表

	RAP2-90	RAP2-125					
A(定转子外径)	90	125					
B	30	30					
N（2.8固定孔个数）	4	4					

3. Performance Parameter

Performance parameter							
Model		RAP2-90	RAP2-125				Unit
Absolute value	Yes						
Resolution ratio	10 Up to 23						Bit
Repositioning accuracy	+-1						LSB
Positioning accuracy		+-25	+-15				Arc-second
Internal location update cycle	<0.01						ms
Maximum speed		30000	15000				r/min
Rotor weight		70	90				g
Weight of stator		100	150				g
Communication interface protocol	SSI/BISS-C UART serial port (supports independent dual interfaces, all three interfaces based on RS422 hardware standard)						
Service voltage	5-12 or 12-30						V
Consumption current	<0.25						A
Reverse power supply protection	The maximum reverse protection voltage of the power supply is the nominal maximum supply voltage.						
Working temperature	-40 to 80						Degree Celsius
Levels of protection	IP67						
Available machine time	1.2 The communication interface data becomes valid after the encoder is powered on for 1.2 seconds. Note: Ensure the encoder remains stationary without rotation during this period.						S
Lash	IEC 60068-2-27 100g for 11ms-axial and radial						
Shake	IEC 60068-2-6 20g for 10-2000Hz-Axial and Radial						

EMC (Electromagne-tic Compatibility)	Complies with IEC 61000-6-2 standard-Suitable for harsh EMC environments	
EMC electromagnetic radiation	Complies with IEC 61000-6-4, suitable for use near electromagnetic interference-sensitive equipment	

4. Cable Sequence and Communication Protocol

4.1 Cable Sequence

4.1.1 Cable Sequence (single Communication Interface Version)

The cable wire sequence for different interface communication protocols is shown in the table below.

Color codes and wire sequences for cables corresponding to different protocols									
Color of cable	Citrus sine-nsis	Black and white	Hispid arth-raxon	Reddish bl-ack	Red	White	Black	Lan	Shielding layer
BISS-C protocol	MA+	MA-	SLO+	SLO-	Vcc	Vcc	GND	GND	GND
SSI protocol	CLK+	CLK-	DATA+	DATA-	Vcc	Vcc	GND	GND	GND
UART gorge line	Empty	Empty	TXD+	TXD-	Vcc	Vcc	GND	GND	GND

4.1.2 Cable Sequence (dual Communication Interface Version)

4.2 BISS-C (One-Way) Interface Protocol

BISS-C (One-way) interface protocol	
Sequence chart	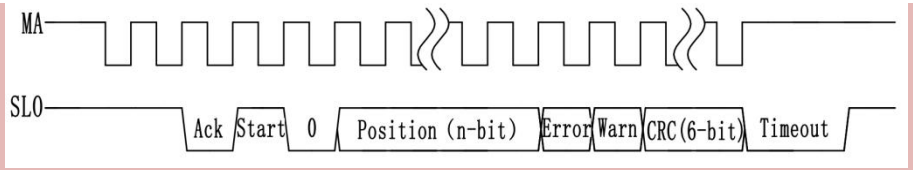
Hardware standards	RS422
Encoder bit count n	10 Up to 23 options
MA	Master clock
SLO	Substation (encoder end) output data
Clock frequency f_{MA}	0.25MHz-3MHz
Position data latch time	MA first rising edge
Ack/start/ “0”	Each is a fixed starting data with 1 bit
Position(n-bit)	n-bit absolute position data, binary code, MSB sent first
Error/Warn	Error/alarm bit, unused, outputs "1 1 "
CRC(6-bit)	The CRC-6 check code obtained by checking the Position (n-bit)/Error/Warn data, the polynomial is $x^6+x^1+x^0$(0x43). After inversion, the MSB is transmitted first.

4.3 SSI Interface Protocol

SSI interface protocol	
Sequence chart	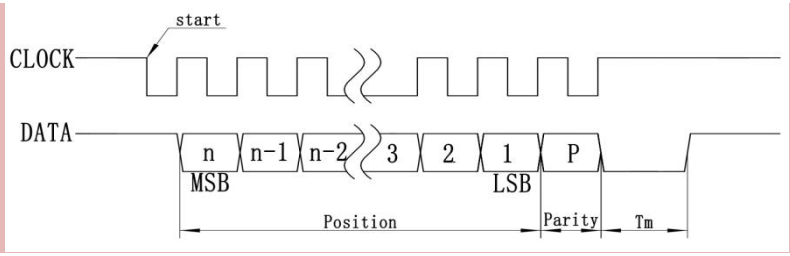
Hardware standards	RS422
Encoder bit count n	10 Up to 23 options
Clock frequency f_{CLOCK}	0.1MHz-1MHz
Tm	20us
P	Parity, even parity bit
Position	n-bit absolute position data, binary code, MSB sent first
start	Time when the position value data is locked
Data transfer interrupt condition	During the data transmission process, if the high-level duration of CLOCK exceeds 10us, the transmission state will be reset. The current position value will then be latched at the next clock falling edge (corresponding to "start" in the timing diagram, with data transmission restarting), and the latched position value will start to be output at the next clock rising edge.

4.4 UART Serial Port (RS422) Protocol

UART serial port (RS422) interface protocol						
Data structure	The encoder transmits one data frame with a position value of 1 per transmission, each frame consists of 6 bytes, and the 8-bit data in each byte is sent via the standard UART protocol.					
Hardware standards	RS422					
Encoder bit count n	10 Up to 22 characters					
Serial port baud rate	230400bps					
Encoder position value update frequency	3.33KHz encoder sends in a timed loop					
Output code	Natural binary					
The data format for each byte of the UART serial port	Start bit: 1 bit, data bits: 8 bits, stop bit: 1 bit, no parity bit 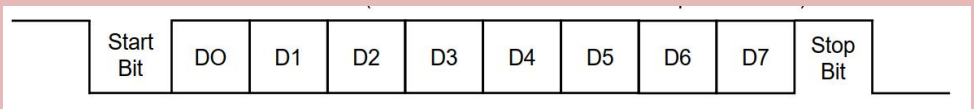					
Data frame format (6 bytes)	First byte (8 bits)	Second byte (8bits)	Third byte (8bits)	4th byte (8bits)	Fifth byte (8bits)	Sixth byte (8bits)
	“11000” +PD[21:19]	‘0’ +PD[18:12]	‘0’ +PD[11:5]	‘0’ +PD[4:0]+CRC[15:14]	‘0’ +CRC[13:7]	‘0’ +CRC[6:0]
Data frame description	PD[21:0] is the encoder position value. When the encoder resolution is less than 22 bits, the higher bits of PD[21:0] are set to 0. For example, in a 19-bit encoder, PD[21:19] is "000", and PD[18:0] is the 19-bit encoder position value. CRC[15:0] is the check code obtained by performing CRC-16 calculation on all 48-bit data (where the position of CRC[15:0] is set to 0). The CRC-16 polynomial is $x^{16}+x^{15}+x^{2}+x^{0}$(0x8005), with an initial value of 0X0000.					

5. Order Information

5.1 Single Communication Interface Version

Order code	RAP2-90-XXX	-XXX	-X	-XX
Meaning	Size and dimensions	Interface protocol	Service voltage	Line length (1 to 20 meters)
Option	RAP2-90 (Stator OD 90mm) RAP2-125 (Stator OD 125mm)	-B23 23-bit BISS-C protocol (resolution optional 10 to 23 bits) -S23 23-bit SSI protocol (resolution optional 10 to 23 bits) m -A22 22-bit UART serial port (RS422) protocol (resolution optional 10 to 22 bits)	-UA 5 to 12V -UB 12 to 30V	-1 1 meter cable -2 2-meter cable . . . . . . -19 19 meter cable -20 20-meter cable
instance	RAP2-125-B23-UA-5, indicating a 125mm outer diameter model of the RAP2 series encoder, 23-bit resolution BISS-C protocol, 5 to 12V power supply, and 5-meter cable.			

5.2 Dual Communication Interface Version

Order code	RAP2-XXX	-XXX	-XXX	-X	-XX
Meaning	Size and dimensions	Interface 1 protocol	Interface 2 protocol	Service voltage	Line length (1 to 20 meters)
Option	RAP2-90 (Stator OD 90mm) RAP2-125 (Stator OD 125mm)	-B23 23-bit BISS-C protocol (resolution optional 10 to 23 bits) -S23 23-bit SSI protocol (resolution optional 10 to 23 bits) -A22 22-bit UART serial port (RS422) protocol (resolution optional 10 to 22 bits)	Optional interface 1 protocol	-UA 5 to 12V -UB 12 to 30V	-1 1 meter cable -2 2-meter cable . . . . . . -19 19 meter cable -20 20-meter cable
instance	RAP2-125-B23-A22-UA-5, indicating the double interface version of the RAP2 series encoder with an outer diameter of 125 mm, interface 1 is the 23-bit resolution BISS-C protocol, interface 2 is the 22-bit resolution serial protocol, 5 to 12V power supply, and 5 m cable.				

RAP3 Series High-Precision Sensor Encoder

Catalogue

1. Product Introduction..... 1
1.1 Product Features..... 1
1.2 Principle Introduction..... 1
2. mechanical dimension drawing..... 2
3. assembly drawing..... 3
4. performance parameter..... 4
5. Cable Sequence and Communication Protocol..... 5
5.1 cable sequence..... 5
5.2 BISS-C (One-way) interface protocol..... 6
5.3 SSI interface protocol..... 7
5.4 UART serial port (RS422) protocol..... 8
6. Order Information..... 9

Version: 20230222

1. Product Introduction

1.1 Product Features

electromagnetic induction principle

Non-optical Encoder-
Anti-pollution Aviation
Aluminum Code Disc
with High Precision and
Impact Resistance
high speed

high reliability absolute value

split type Easy to install

IP67 large aperture

Superior environmental adaptability
supports independent dual interface

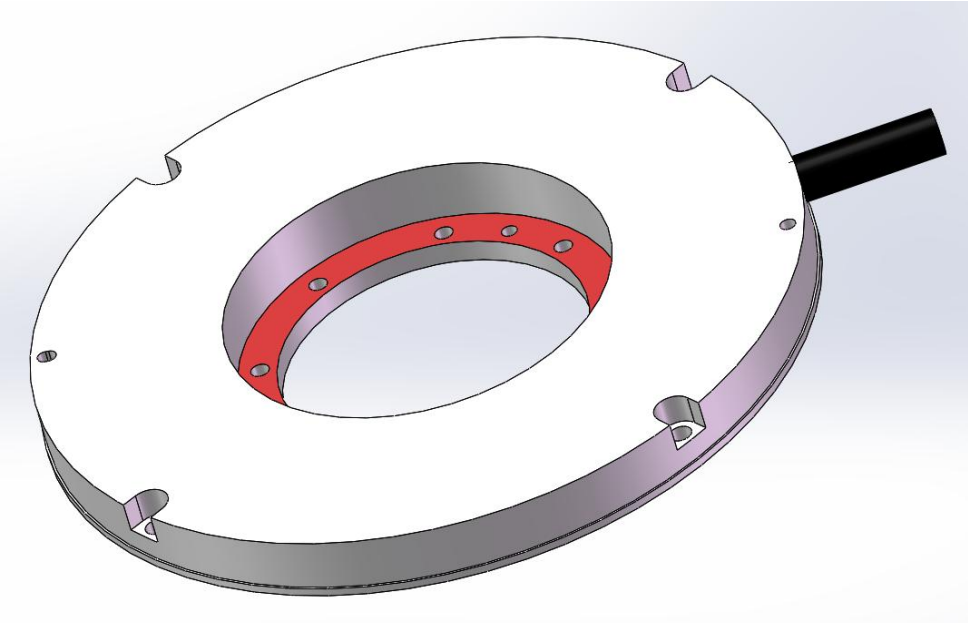

1.2 Principle Introduction

The R A P 3 series sensor encoder is based on the principle of electromagnetic induction detection, and consists of a stator and a rotor. Compared with the photoelectric encoder, it has higher anti-pollution and anti-impact ability.

The structure can be understood as a "planar rotary transformer", the induction conductor is distributed on the surface of the stator and rotor in the form of planar winding.

It has absolute value detection channel, and can calculate the absolute position of encoder when it is turned on.

It has strong environmental adaptability and can work normally in water.

2. 机械尺寸图

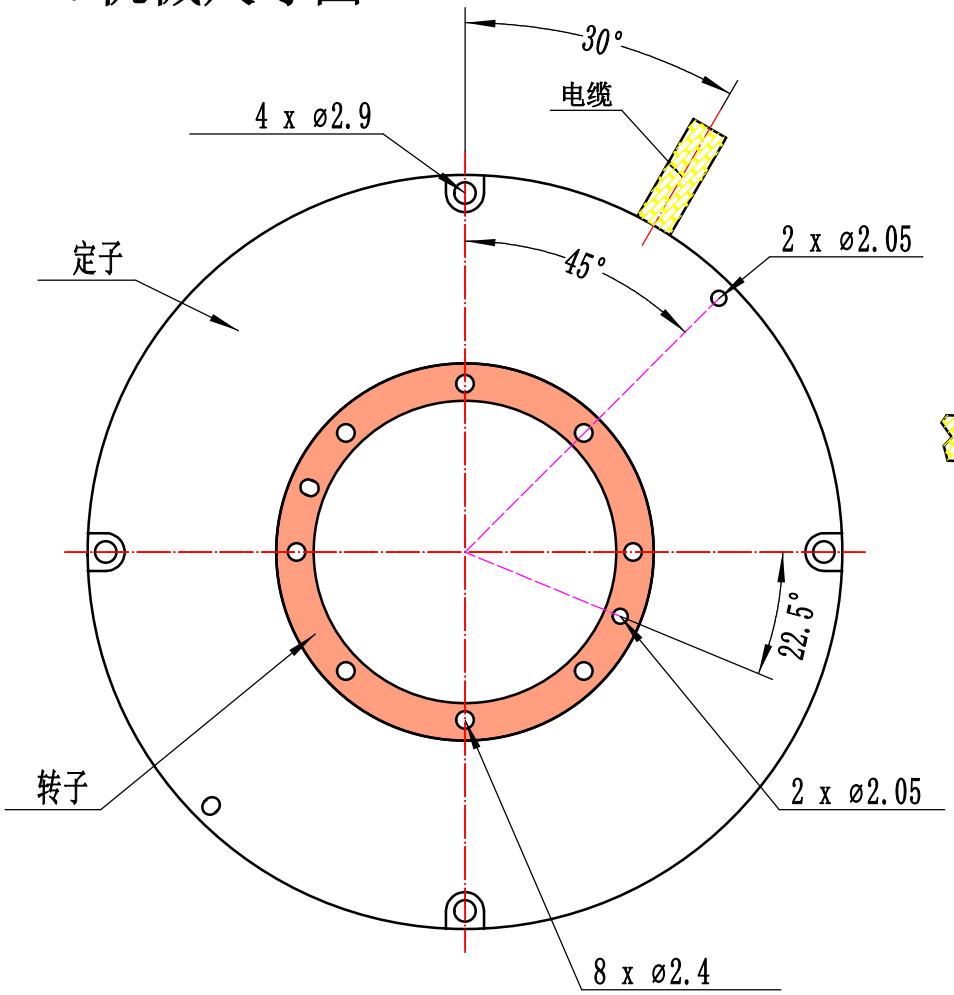

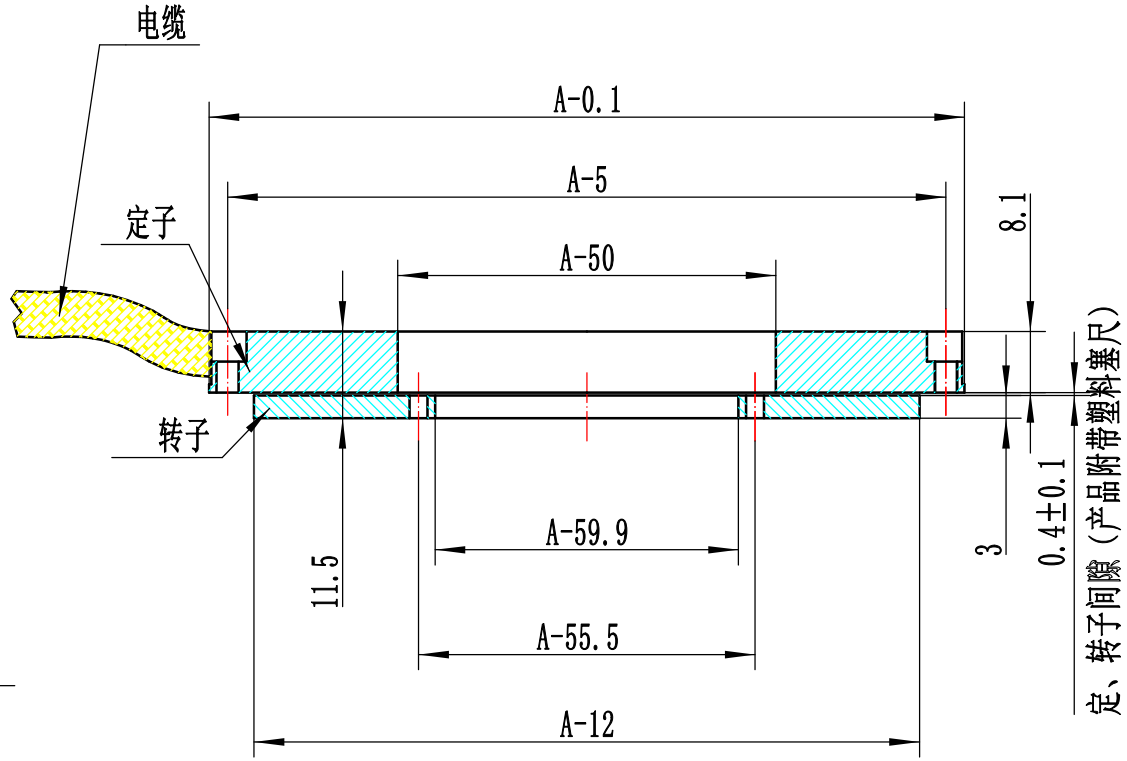

各型号尺寸表

	RAP3-100						
A(定子外径+0.1)	100						

3. 装配图

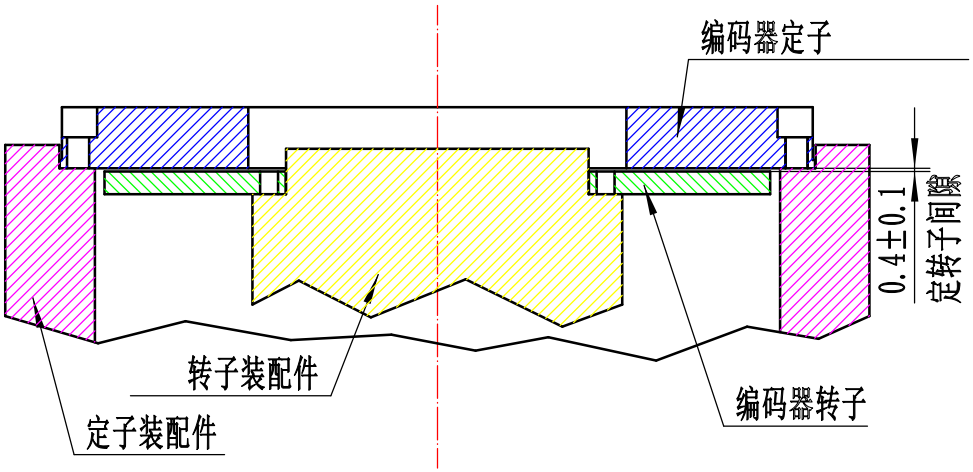

定、转子安装示意图

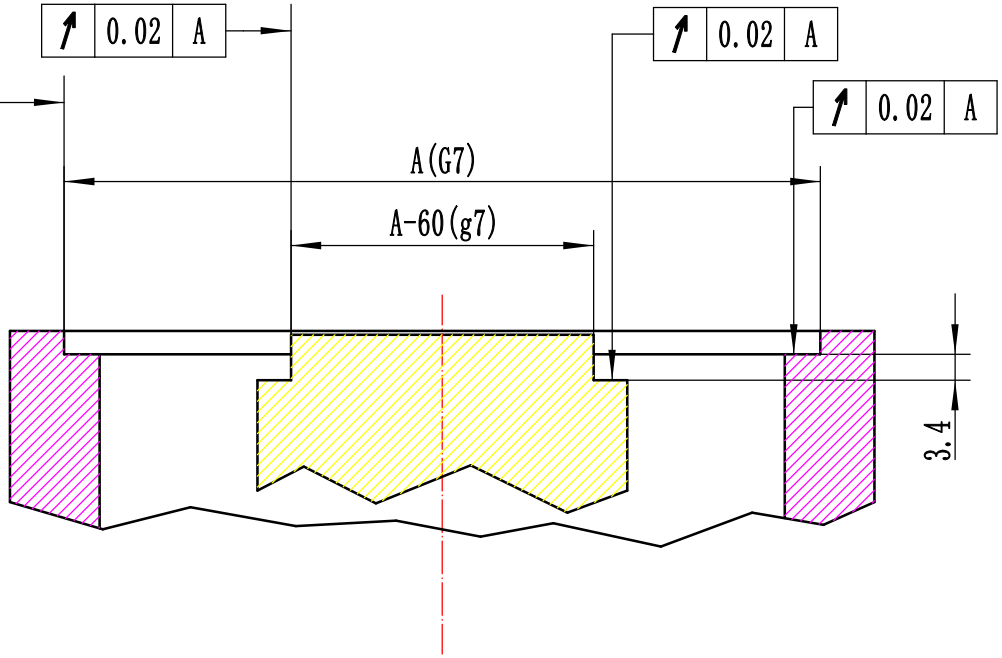

用户端尺寸示意图

各型号尺寸表

	RAP3-100						
A(定子外径+0.1)	100						

4. Performance Parameter

Performance parameter							
Model		RAP3-100					Unit
Absolute value	Yes						
Resolution ratio	10 Up to 23						Bit
Repositioning accuracy	+-1						LSB
Positioning accuracy		+-30					Arc-second
Internal location update cycle	<0.01						ms
Maximum speed		30000					r/min
Rotor weight		28					g
Weight of stator		110					g
Communication interface protocol	SSI/BISS-C UART serial port (supports independent dual interfaces, all three interfaces based on RS422 hardware standard)						
Service voltage	5-12 or 12-30						V
Consumption current	<0.25						A
Reverse power supply protection	The maximum reverse protection voltage of the power supply is the nominal maximum supply voltage.						
Working temperature	-40 to 80						Degree Celsius
Levels of protection	IP67						
Available machine time	1.2 The communication interface data becomes valid after the encoder is powered on for 1.2 seconds. Note: Ensure the encoder remains stationary without rotation during this period.						S
Lash	IEC 60068-2-27 100g for 11ms-axial and radial						
Shake	IEC 60068-2-6 20g for 10-2000Hz-Axial and Radial						

EMC (Electromagne-tic Compatibility)	Complies with IEC 61000-6-2 standard-Suitable for harsh EMC environments	
EMC electromagnetic radiation	Complies with IEC 61000-6-4, suitable for use near electromagnetic interference-sensitive equipment	

5. Cable Sequence and Communication Protocol

5.1 Cable Sequence

5.1.1 Cable Sequence (single Communication Interface Version)

The cable wire sequence for different interface communication protocols is shown in the table below.

Color codes and wire sequences for cables corresponding to different protocols									
Color of cable	Citrus sine-nsis	Black and white	Hispid arth-raxon	Reddish bl-ack	Red	White	Black	Lan	Shielding layer
BISS-C protocol	MA+	MA-	SLO+	SLO-	Vcc	Vcc	GND	GND	GND
SSI protocol	CLK+	CLK-	DATA+	DATA-	Vcc	Vcc	GND	GND	GND
UART gorge line	Empty	Empty	TXD+	TXD-	Vcc	Vcc	GND	GND	GND

5.1.2 Cable Sequence (dual Communication Interface Version)

5.2 BISS-C (One-Way) Interface Protocol

BISS-C (One-way) interface protocol	
Sequence chart	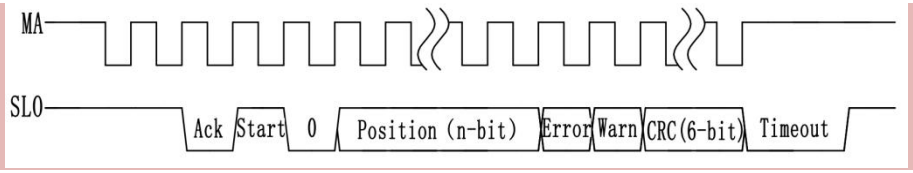
Hardware standards	RS422
Encoder bit count n	10 Up to 23 options
MA	Master clock
SLO	Substation (encoder end) output data
Clock frequency f_{MA}	0.25MHz-3MHz
Position data latch time	MA first rising edge
Ack/start/ “0”	Each is a fixed starting data with 1 bit
Position(n-bit)	n-bit absolute position data, binary code, MSB sent first
Error/Warn	Error/alarm bit, unused, outputs "1 1 "
CRC(6-bit)	The CRC-6 check code obtained by checking the Position (n-bit)/Error/Warn data, the polynomial is $x^6+x^1+x^0$(0x43). After inversion, the MSB is transmitted first.

5.3 SSI Interface Protocol

SSI interface protocol	
Sequence chart	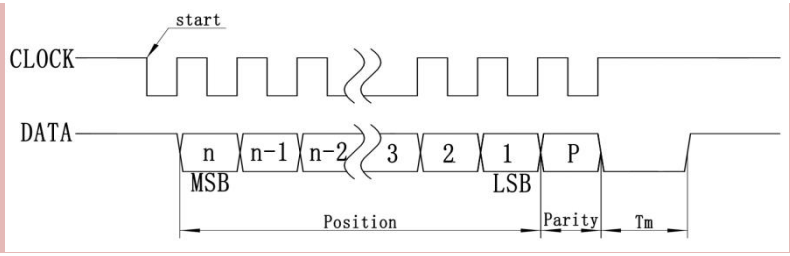
Hardware standards	RS422
Encoder bit count n	10 Up to 23 options
Clock frequency f_{CLOCK}	0.1MHz-1MHz
Tm	20us
P	Parity, even parity bit
Position	n-bit absolute position data, binary code, MSB sent first
start	Time when the position value data is locked
Data transfer interrupt condition	During data transmission, if the high-level duration of CLOCK exceeds 10us, the transmission state will be reset. The current position value will then be latched at the next clock falling edge (corresponding to "start" in the timing diagram, with data transmission restarting), and the latched position value will start to be output at the next clock rising edge.

5.4 UART Serial Port (RS422) Protocol

UART serial port (RS422) interface protocol						
Data structure	The encoder transmits one data frame per position value, each frame consists of 6 bytes, and the 8-bit data of each byte is sent via the standard UART protocol.					
Hardware standards	RS422					
Encoder bit count n	10 Up to 22 characters					
Serial port baud rate	230400bps					
Encoder position value update frequency	3.33KHz encoder sends in a timed loop					
Output code	Natural binary					
The data format for each byte of the UART serial port	Start bit: 1 bit, data bits: 8 bits, stop bit: 1 bit, no parity bit 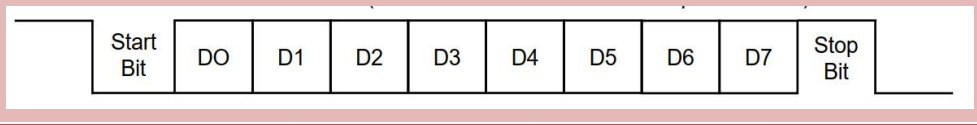					
Data frame format (6 bytes)	First byte (8 bits)	Second byte (8bits)	Third byte (8bits)	4th byte (8bits)	Fifth byte (8bits)	Sixth byte (8bits)
	“11000” +PD[21:19]	‘0’ +PD[18:12]	‘0’ +PD[11:5]	‘0’ +PD[4:0]+CRC[15:14]	‘0’ +CRC[13:7]	‘0’ +CRC[6:0]
Data frame description	1. PD[21:0] is the encoder position value. When the encoder resolution is less than 22 bits, the high bit of PD[21:0] is 0. For example, with a 19-bit encoder, PD[21:19] is "000" and PD[18:0] is the 19-bit encoder position value. 2. CRC[15:0] is the CRC-16 checksum calculated for all 48bits of data (where the position of CRC[15:0] is set to 0). The CRC-16 polynomial is $x^{16}+x^{15}+x^{2}+x^{0}$(0x8005), with an initial value of 0X0000.					

6. Order Information

6.1 Single Communication Interface Version

Order code	RAP3-XXX	-XXX	-X	-XX
Meaning	Size and dimensions	Interface protocol	Service voltage	Line length (1 to 20 meters)
Option	RAP3-100 Stator outer diameter: 100mm	-B23 23-bit BISS-C protocol (resolution optional 10 to 23 bits) -S23 23-bit SSI protocol (resolution optional 10 to 23 bits) -A22 22-bit UART serial port (RS422) protocol (resolution optional 10 to 22 bits)	-UA 5 to 12V -UB 12 to 30V	-1 1 meter cable -2 2-meter cable . . . . . . 19 19 meter -20 20-meter
instance	RAP3-100-B23-UA-5, indicating a 100mm outer diameter model of the RAP3 series encoder, 23-bit resolution BISS-C protocol, 5 to 12 V power supply, and 5-meter cable.			

6.2 Dual Communication Interface Version

Order code	RAP3-XXX	-XXX	-XXX	-X	-XX
Meaning	Size and dimensi-ons	Interface 1 protocol	Interface 2 protocol	Service voltage	Line length (1 to 20 meters)
Option	RAP3-100 Stator OD: 100mm	-B23 23-bit BISS-C protocol (resolution optional 10 to 23 bits) -S23 23-bit SSI protocol (resolution optional 10 to 23 bits) -A22 22-bit UART serial port (RS422) protocol (resolution optional 10 to 22 bits)	Optional items: same as Interface 1 protocol	-UA 5 to 12V -UB 12 to 30V	-1 1 meter cable -2 2-meter cable . . . . . . -19 19 meter cable -20 20-meter cable
instance	RAP3-100-B23-A22-UA-5, indicating the double interface version of the RAP3 series encoder with an outer diameter of 100 mm, interface 1 is the 23-bit resolution BISSC protocol, interface 2 is the 22-bit resolution serial port protocol, 5 to 12V power supply, and 5 m cable.				

RAP4 Series High-Precision Sensor Encoder

Catalogue

1. Product Introduction..... 1
1.1 Product Features..... 1
1.2 Principle Introduction..... 1
2. mechanical dimension drawing..... 2
3. assembly drawing..... 3
4. performance parameter..... 4
5. Cable Sequence and Communication Protocol..... 5
5.1 cable sequence..... 5
5.2 BISS-C (One-way) interface protocol..... 6
5.3 SSI interface protocol..... 7
5.4 UART serial port (RS422) protocol..... 8
6. Order Information..... 9

Version: 20230221

1. Product Introduction

1.1 Product Features

electromagnetic induction principle

Non-optical Encoder-
Anti-pollution Aviation
Aluminum Code Disc
with High Precision and
Impact Resistance
high speed

High reliability absolute value

split type Easy to install

IP67 large aperture

Superior environmental adaptability
supports independent dual interface

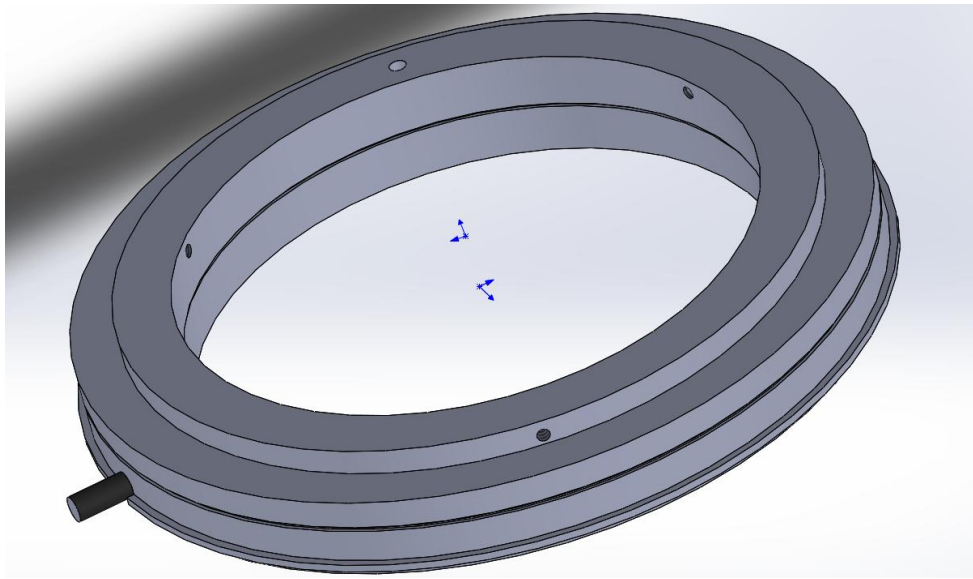

1.2 Principle Introduction

RAP4 series sensor encoder is based on the principle of electromagnetic induction detection, composed of stator and rotor. Compared with photoelectric encoder, it has higher anti-pollution and anti-impact ability.

The structure can be understood as a "planar rotary transformer", the induction conductor is distributed on the surface of the stator and rotor in the form of planar winding.

It has absolute value detection channel, and can calculate the absolute position of encoder when it is turned on.

It has strong environmental adaptability and can work normally in water.

2. 机械尺寸图

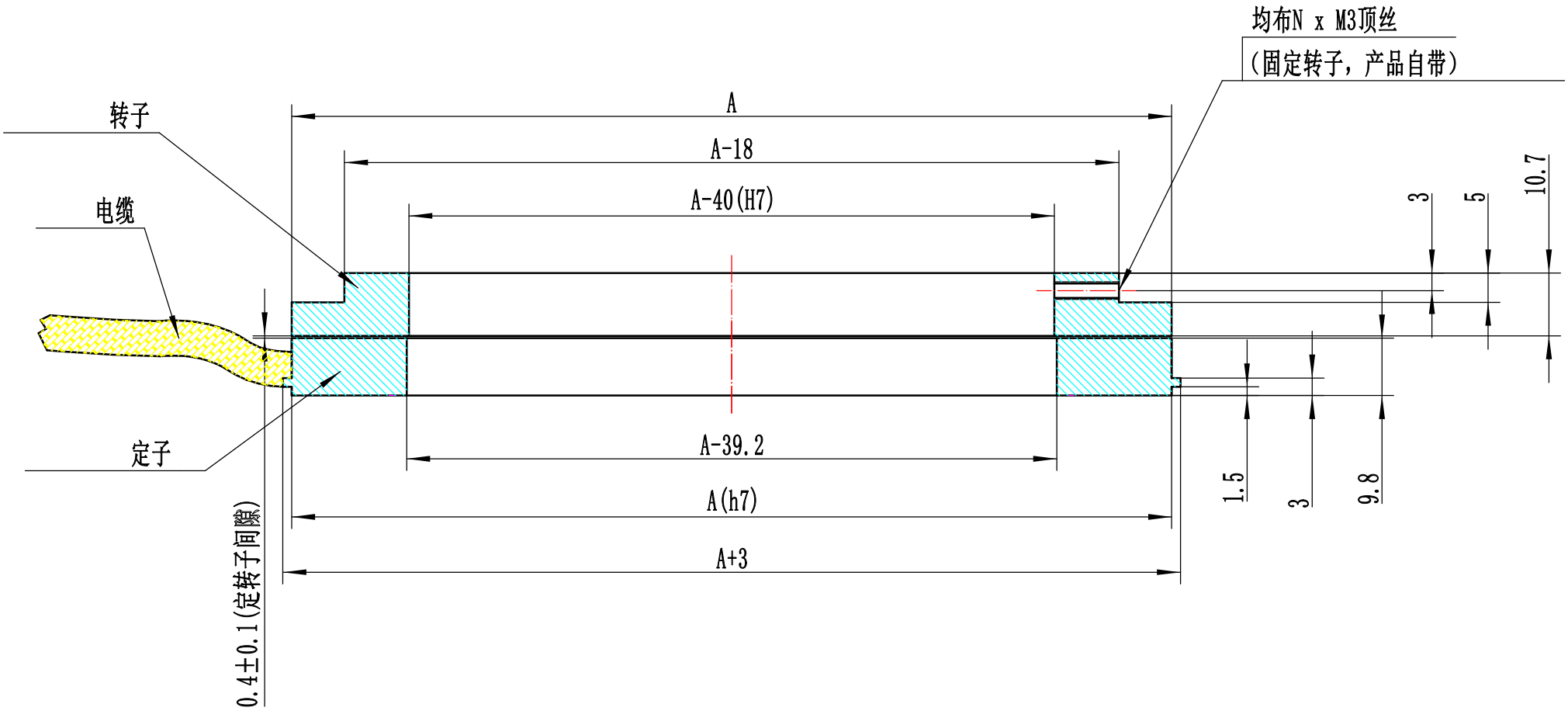

各型号尺寸表

	RAP4-150						
A	150						
N(转子顶丝数量)	3						

3. 装配图

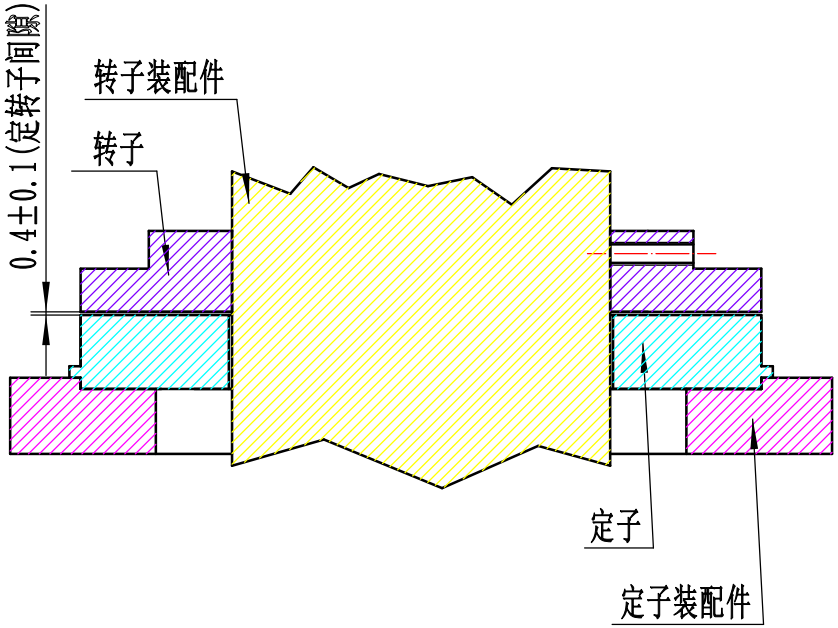

定、转子安装示意图

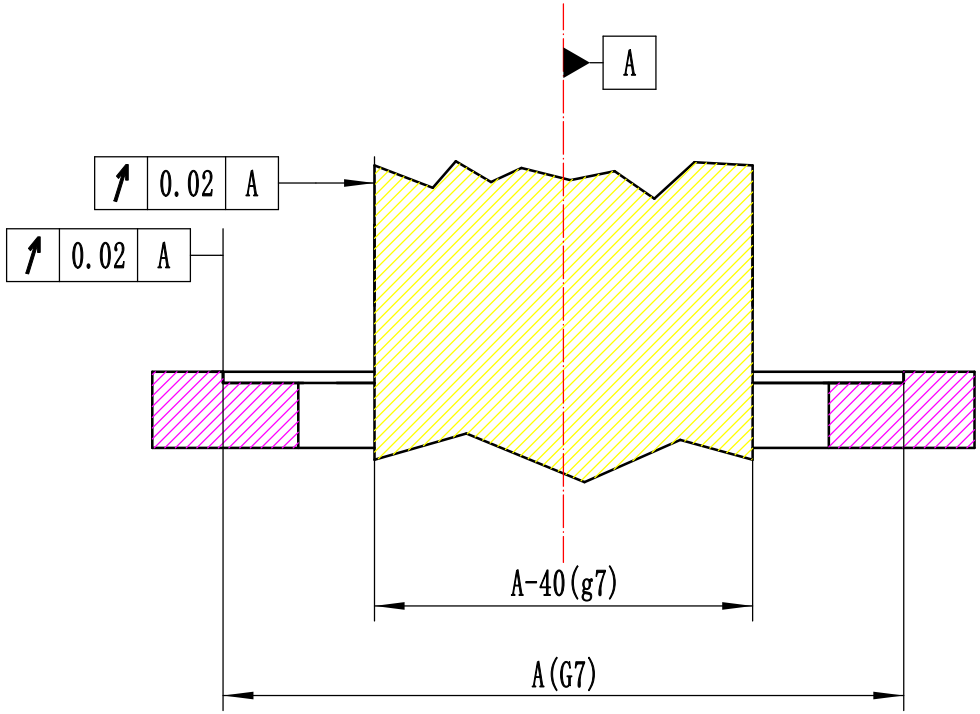

用户端尺寸示意图

各型号尺寸表

	RAP4-150						
A	150						

4. Performance Parameter

Performance parameter							
Model		RAP4-150					Unit
Absolute value	Yes						
Resolution ratio	10 Up to 23						Bit
Repositioning accuracy	+-1						LSB
Positioning accuracy		+-15					Arc-second
Internal location update cycle	<0.01						ms
Maximum speed		15000					r/min
Rotor weight							g
Weight of stator							g
Communication interface protocol	SSI/BISS-C UART serial port (supports independent dual interfaces, all three interfaces based on RS422 hardware standard)						
Service voltage	5-12 or 12-30						V
Consumption current	<0.25						A
Reverse power supply protection	The maximum reverse protection voltage of the power supply is the nominal maximum supply voltage.						
Working temperature	-40 to 80						Degree Celsius
Levels of protection	IP67						
Available machine time	1.2 The communication interface data becomes valid after the encoder is powered on for 1.2 seconds. Note: Ensure the encoder remains stationary without rotation during this period.						S
Lash	IEC 60068-2-27 100g for 11ms-axial and radial						
Shake	IEC 60068-2-6 20g for 10-2000Hz-Axial and Radial						

EMC (Electromagne-tic Compatibility)	Complies with IEC 61000-6-2 standard-Suitable for harsh EMC environments	
EMC electromagnetic radiation	Complies with IEC 61000-6-4, suitable for use near electromagnetic interference-sensitive equipment	

5. Cable Sequence and Communication Protocol

5.1 Cable Sequence

5.1.1 Cable Sequence (single Communication Interface Version)

The cable wire sequence for different interface communication protocols is as shown in the table below.

Color codes and wire sequences for cables corresponding to different protocols									
Color of cable	Citrus sine-nsis	Black and white	Hispid arth-raxon	Reddish bl-ack	Red	White	Black	Lan	Shielding layer
BISS-C protocol	MA+	MA-	SLO+	SLO-	Vcc	Vcc	GND	GND	GND
SSI protocol	CLK+	CLK-	DATA+	DATA-	Vcc	Vcc	GND	GND	GND
UART gorge line	Empty	Empty	TXD+	TXD-	Vcc	Vcc	GND	GND	GND

5.1.2 Cable Sequence (dual Communication Interface Version)

5.2 BISS-C (One-Way) Interface Protocol

BISS-C (One-way) interface protocol	
Sequence chart	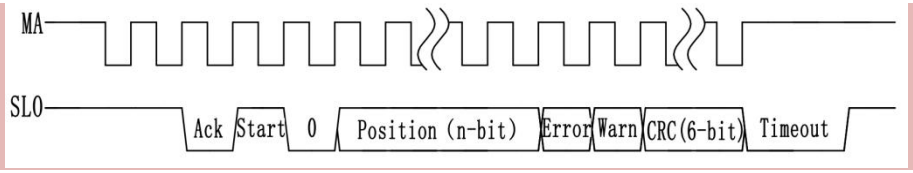
Hardware standards	RS422
Encoder bit count n	10 Up to 23 options
MA	Master clock
SLO	Substation (encoder end) output data
Clock frequency f_{MA}	0.25MHz-3MHz
Position data latch time	MA first rising edge
Ack/start/ “0”	Each is a fixed starting data with 1 bit
Position(n-bit)	n-bit absolute position data, binary code, MSB sent first
Error/Warn	Error/alarm bit, unused, outputs "1 1 "
CRC(6-bit)	The CRC-6 check code obtained by checking the Position (n-bit)/Error/Warn data, the polynomial is $x^6+x^1+x^0$(0x43). After inversion, the MSB is transmitted first.

5.3 SSI Interface Protocol

SSI interface protocol	
Sequence chart	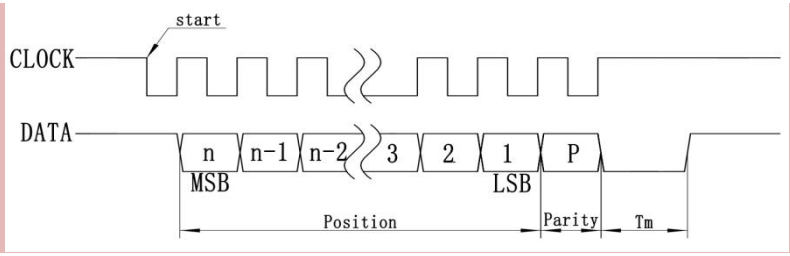
Hardware standards	RS422
Encoder bit count n	10 Up to 23 options
Clock frequency f_{CLOCK}	0.1MHz-1MHz
Tm	20us
P	Parity, even parity bit
Position	n-bit absolute position data, binary code, MSB sent first
start	Time when the position value data is locked
Data transfer interrupt condition	During data transmission, if the CLOCK high level duration exceeds 10 microseconds, the transmission state resets. The current position value is then latched at the next clock's falling edge (corresponding to the start signal in the timing diagram), and the latched value begins output at the next clock's rising edge.

5.4 UART Serial Port (RS422) Protocol

UART serial port (RS422) interface protocol						
Data structure	The encoder transmits one data frame per position value, each frame consists of 6 bytes, and the 8-bit data of each byte is sent via the standard UART protocol.					
Hardware standards	RS422					
Encoder bit count n	10 Up to 22 characters					
Serial port baud rate	230400bps					
Encoder position value update frequency	3.33KHz encoder sends in a timed loop					
Output code	Natural binary					
The data format for each byte of the UART serial port	Start bit: 1 bit, data bit: 8 bits, stop bit: 1 bit, no parity bit 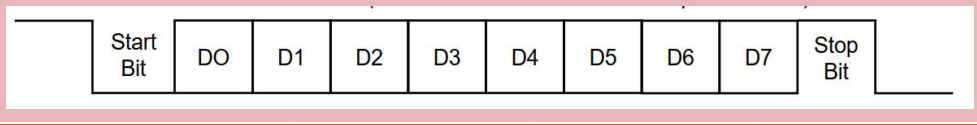					
Data frame format (6 bytes)	First byte (8 bits)	Second byte (8bits)	Third byte (8bits)	4th byte (8bits)	Fifth byte (8bits)	Sixth byte (8bits)
	“11000” +PD[21:19]	‘0’ +PD[18:12]	‘0’ +PD[11:5]	‘0’ +PD[4:0]+CRC[15:14]	‘0’ +CRC[13:7]	‘0’ +CRC[6:0]
Data frame description	1. PD[21:0] is the encoder position value. When the encoder resolution is less than 22 bits, the high bit of PD[21:0] is 0. For example, with a 19-bit encoder, PD[21:19] is "000" and PD[18:0] is the 19-bit encoder position value. 2. CRC[15:0] is the CRC-16 checksum calculated for all 48bits of data (where the position of CRC[15:0] is set to 0). The CRC-16 polynomial is $x^{16}+x^{15}+x^{2}+x^{0}$(0x8005), with an initial value of 0X0000.					

6. Order Information

6.1 Single Communication Interface Version

Order code	RAP4-XXX	-XXX	-X	-XX
Meaning	Size and dimensions	Interface protocol	Service voltage	Line length (1 to 20 meters)
Option	RAP4-150 Stator outer diameter: 150mm	-B23 23-bit BISS-C protocol (resolution optional 10 to 23 bits) -S23 23-bit SSI protocol (resolution optional 10 to 23 bits) -A22 22-bit UART serial port (RS422) protocol (resolution optional 10 to 22 bits)	-UA 5 to 12V -UB 12 to 30V	-1 1 meter cable -2 2-meter cable . . . . . . -19 19 meter cable -20 20-meter cable
instance	RAP4-150-B23-UA-5, indicating a 150mm outer diameter model of the RAP4 series encoder, 23-bit resolution BISS-C protocol, 5 to 12 V power supply, and 5 m cable length.			

6.2 Dual Communication Interface Version

Order code	RAP4-XXX	-XXX	-XXX	-X	-XX
Meaning	Size and dimensions	Interface 1 protocol	Interface 2 protocol	Service voltage	Line length (1 to 20 meters)
Option	RAP4-150 Stator OD: 150mm	-B23 23-bit BISS-C protocol (resolution optional 10 to 23 bits) -S23 23-bit SSI protocol (resolution optional 10 to 23 bits) -A22 22-bit UART serial port (RS422) protocol (resolution optional 10 to 22 bits)	Optional items: same as Interface 1 protocol	-UA 5 to 12V -UB 12 to 30V	-1 1 meter cable -2 2-meter cable . . . . . . -19 19 meter cable -20 20-meter cable
instance	RAP4-150-B23-A22-UA-5, indicating the double interface version of the RAP4 series encoder with an outer diameter of 150 mm, interface 1 is the 23-bit resolution BISS-C protocol, interface 2 is the 22-bit resolution serial protocol, 5 to 12V power supply, and 5 m cable.				